Tricon Precast Limited™

TRIWEB™ RETAINED SOIL WALL SYSTEM

(5'-0" x 5'-0" Panels)

CONSTRUCTION MANUAL

PLEASE CONTACT YOUR LOCAL SYSTEM PROVIDER:

WWW.TRICONPRECAST.COM

Rev. October 2012

NOTES

Tricon Precast Limited™

TRIWEB™ RETAINED SOIL WALL SYSTEM

The Triweb™ Wall is a mechanically stabilized earth retaining wall structure comprised of a cast-in-place leveling course (by others), precast concrete fascia panels, panel alignment shims, HDPE bearing pads, filter fabric, adhesive joint materials, connection anchors, ParaWeb geosynthetic strips soil reinforcement combined with a select backfill mass (by others). Included with the system are engineered design and erection drawings, precast concrete copings, as well as limited on-site technical assistance as required.

Figure 1 below illustrates the installed system.

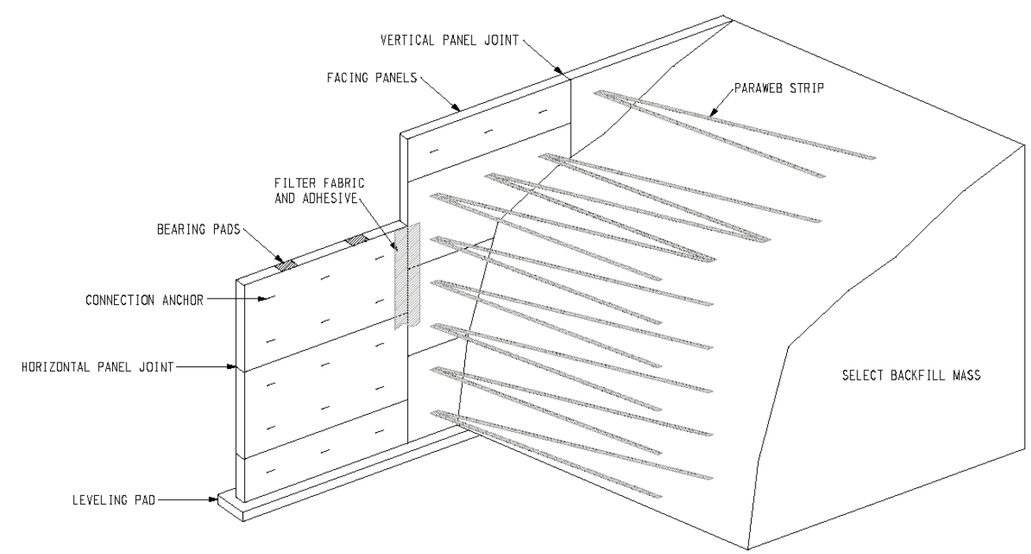

FIGURE 1

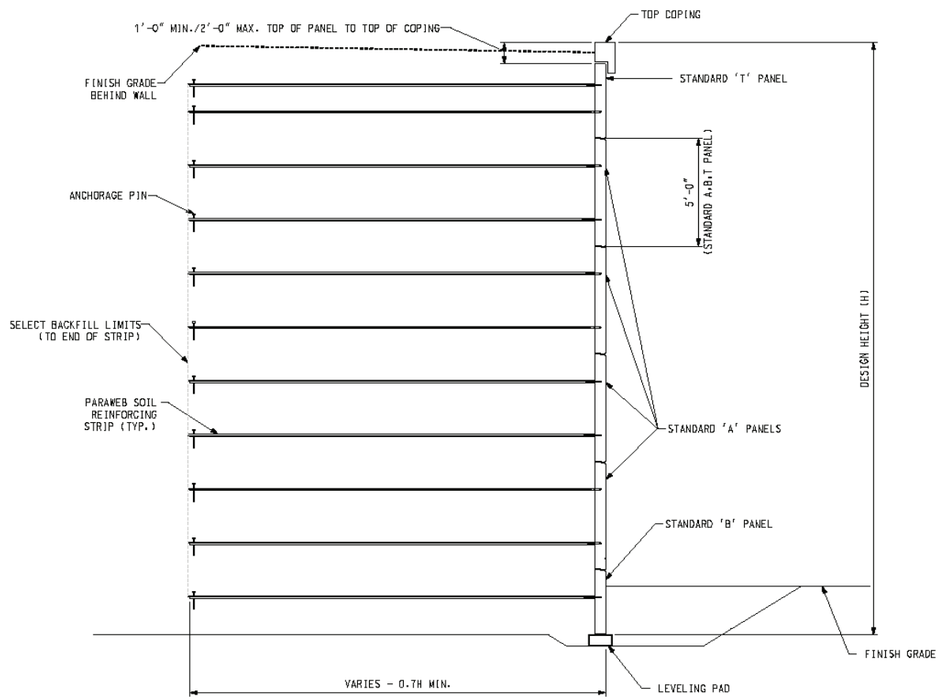

FIGURE 2

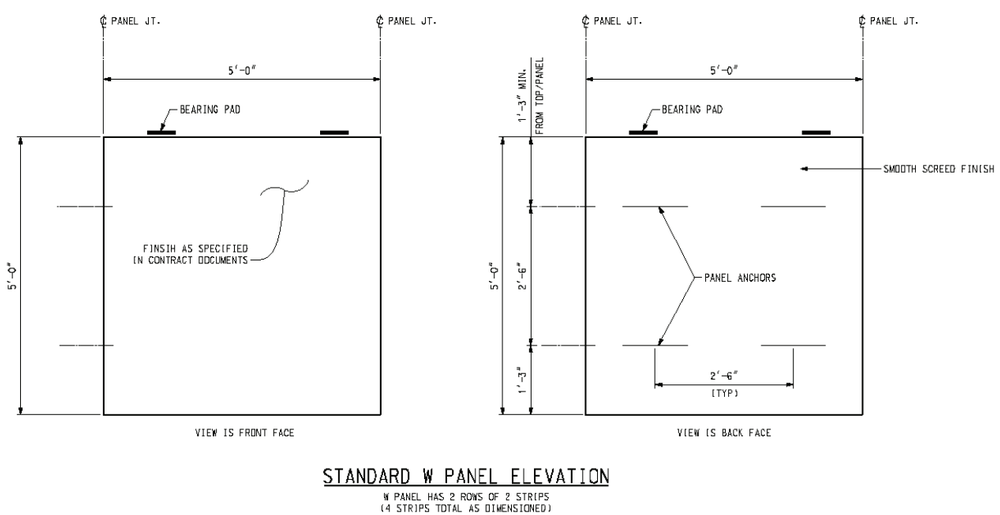

STANDARD W PANEL ELEVATION

W PANEL HAS 2 ROWS OF 2 STRIPS (4 STRIPS TOTAL AS DIMENSIONED)

FIGURE 3

Founded in 1987, Tricon Precast Ltd. provides innovative engineered MSE wall and bridge systems throughout North America. With headquarters in Houston, Tricon operates two state-of-the-art plants strategically located in Texas; Houston in the Gulf Coast Region and San Antonio in the Central Texas Region making it the largest precast concrete manufacturer in the state. Networks of licensed producer partners expand the reach of the Tricon systems by providing manufacturing and support across the US and Canada.

Tricon de Mexico, headquartered in Mexico City, provides the Tricon products and systems into many parts of that country.

TEG Engineering, headquartered in Grand Rapids, MI, with offices in Texas, provides a full range of structural engineering services not only for all Tricon system applications but for other civil construction projects across the continent. TEG continues to expand its network with the most talented and innovative professional engineering staff in the country.

Tricon's unique patented systems are produced and offered by a growing number of licensed precast affiliate partners. Licensing agreements are currently available in certain geographic locations. Interested precast concrete producers should please contact us for more information.

Products and Systems include:

- ***Retained Soil Wall System™***
- ***Drill Shaft Fascia Panel Wall System***
- ***Soil Nail Fascia Panel Wall System***
- ***Temporary Wire Wall System***
- ***Permanent Wire Wall System***
- ***Redi-Span™ Arch Bridge System***
- ***Con-Struct™ Prefabricated Bridge System***
- ***Sound Wall System***
- ***Privacy Wall System***
- ***Precast Concrete Traffic Barriers***
- ***Custom Civil, Industrial and Commercial Precast Concrete Services***

Materials Supplied with the Triweb ™ Retained Soil Wall System

- Precast Concrete Fascia Panels
- Panel Alignment Shims
- Panel Bearing Pads
- Filter Fabric and Adhesive
- Soil Reinforcing Strips
- Panel Lifting Device (1 set)

Material, Tools and Equipment Required by Contractor

- Excavation Equipment
- Leveling Course Formwork and Concrete
- Crane, Picker or Boom Truck
- Cable and Sling Rigging
- Survey Instruments
- Chalk Line, Level, Plumb Bob
- Wooden Wedges, Pry Bars
- Select Backfill Material and Placement Equipment
- Small Vibratory Roller
- Joint Clamps and Bracing
- Hammer Drill and Concrete Bits
- Miscellaneous Small Tools

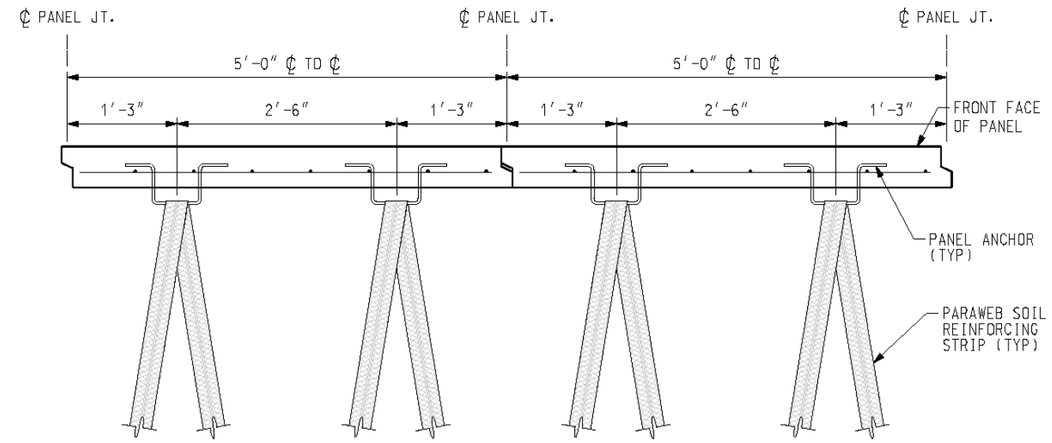

PANEL WITH REINFORCEMENT STRIPS (PLAN VIEW)

(2) PARAWEB STRIPS PER ROW FOR 5'-0" PANEL

FIGURE 4

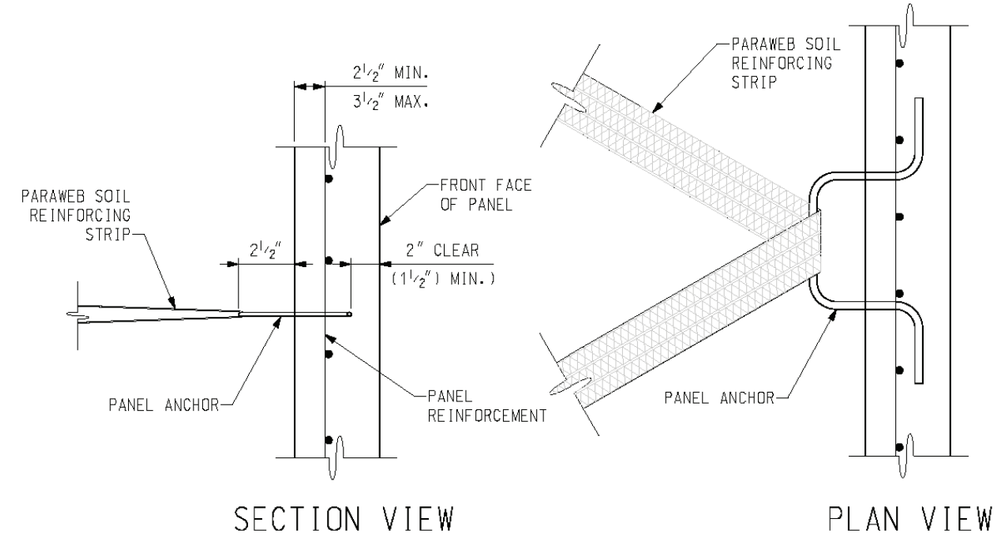

TYPICAL LOOP ANCHOR DETAILS

FIGURE 5

Delivery, Storage and Handling

Soil Reinforcement Strips

- Strips are supplied in rolls, and tagged with description.
- Strips will be transported to site on pallets with a maximum weight of 1.5 tons.
- A suitably large area should be set up to hold all items, placing in groups by grade as shown by color coded labels.

Wall Panels

- Unloading - Panels can be unloaded individually by using a four point lift with strips. Panels should be stacked four high on ground level. The panels are shipped stacked four high and can be unloaded by stack using nylon slings.
- Storage - Panels should be stored in adequate dunnage as near to the final setting position as possible on firm, level ground. Dunnage should maintain vertical alignment to eliminate the chance of the panel being damaged. When lifting panels off storage stack, always place a wooden block between panels to prevent damage when rotating to vertical position. (See figure 6)
- Care should be taken not to break, bend, or otherwise damage panel anchors.

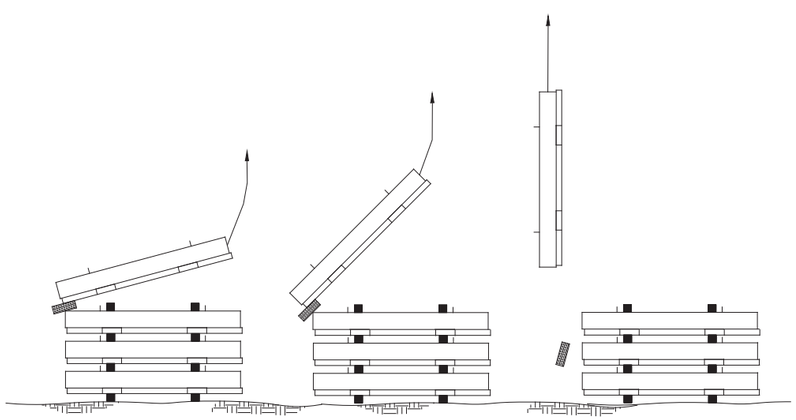

FIGURE 6

V. Final Completion of the Wall

A. Install top panels as described in Step IV – Installation of Second and Following Courses.

B. Complete backfill and compaction. Remove all bracing, clamps, and wedges.

C. Form and pour the level-up course for precast coping, or form and pour coping in place as specified.

IV. Installation of Second and Following Courses

A. Always backfill to the top of the prior course before setting the next course.

B. Remove clamps one panel at a time. Place supplied bearing pads on top of the panels in the preformed bearing pad pockets.

C. Set intermediate panel in place. Check spacing, and the horizontal and vertical alignment of the panel. Set joint clamps.

D. Install supplied filter fabric in the vertical/horizontal joints with the provided adhesive.

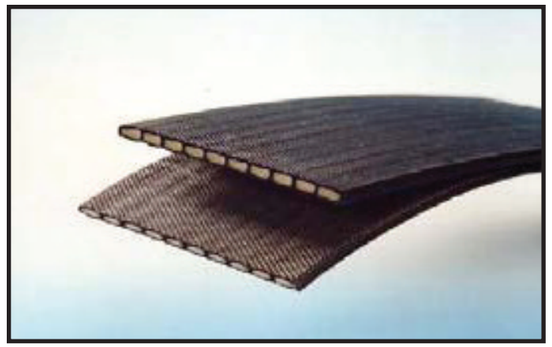

E. Install backfill and reinforcement as described in Step III - Backfill.

F. Check vertical alignment, no bracing shall be required for the remainder of the wall.

G. Backfill front of the wall above the leveling pad.

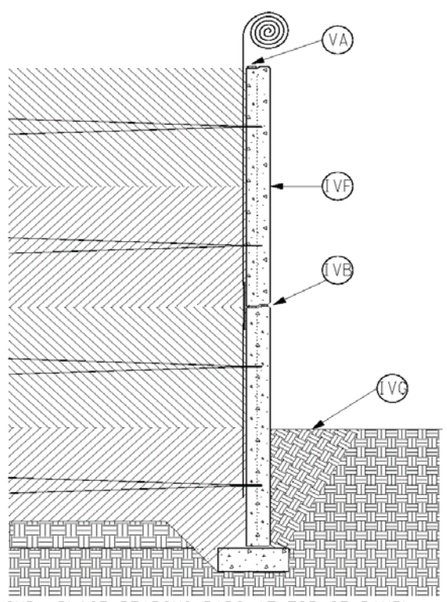

IVB. PLACE BEARING PADS AT TOP OF PANEL
IVF. PLACE AND PLUMB NEXT LIFT OF PANELS.
VA. REPEAT SEQUENCE IIIB THRU IVB UNTIL TOP OF WALL ELEVATION IS REACHED.
IVG. BACKFILL AND COMPACT TOE AT FACE OF WALL.

ERECTION PROCEDURE

I. Level Pad Construction

A. Layout the leveling pad on the centerline and grade of the wall panels as provided by the project drawings.

B. Course dimensions are detailed in the supplied erection drawings. Typical pad is 6 inches thick and 12 inches wide.

C. Finish leveling course to a smooth trowel finish.

D. LINE AND GRADE MUST BE HELD TO 1/4” TOLERANCE.

II. Setting Bottom Panels

A. Snap chalk line on leveling pad along the face of the panels.

B. Place first bottom panel. Closely check for horizontal alignment and vertical plumb. Back-batter panel as required to obtain vertical plumb after backfill. A 1/4” to 3/4” back-batter is typical – adjust as needed for different backfill materials. Use wooden wedges and/or shims as required.

C. Brace panel with 2 X 4 lumber for vertical alignment.

D. Set second half bottom panel at a typical 3/8” or 3/4” spacing (See specific erection drawings). Align, shim, and brace panel.

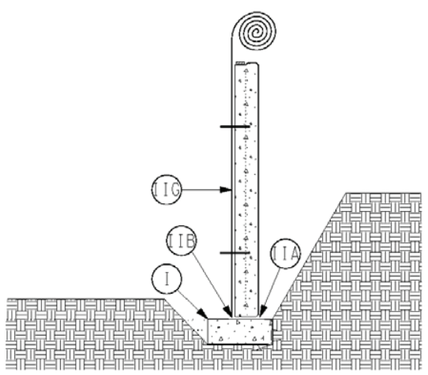

I. CAST OR PLACE LEVELING PAD ON PREPARED FOUNDATION. COMPACT ANY VOIDS ON BACK FACE SIDE.
IIA. LAYOUT PROPER PANEL FACE ALIGNMENT ON LEVELING PAD.
IIB. PLACE AND PLUMB BOTTOM ROW OF PANELS. USE SHIMS AS REQUIRED.
IIG. COVER ALL VERTICAL AND HORIZONTAL JOINTS WITH SPECIFIED FILTER FABRIC.

E. Use clamps to secure First and Second panels together.

F. Set remaining bottom panels in wall as described in C & D above.

G. Install supplied filter fabric with adhesive over the vertical and horizontal joints. Make sure to cover the joint between the panel and leveling course.

III. Backfill

A. Place and compact the first lift of specified backfill. Use hand operated compactors within 3 feet of the panel.

B. Place reinforcing strips around loop anchors at panel, anchor strips at back of reinforcing zone using anchorage pin or bar.

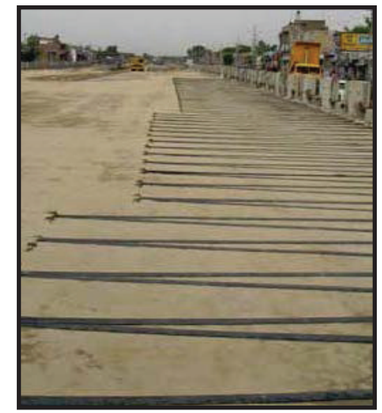

C. Continue installing and compacting backfill in specified lifts to the next level of connectors. (<u>Do not operte tracked equipment on reinforcing strips</u>. Equipment with rubber fires can be used, but with extreme caution.

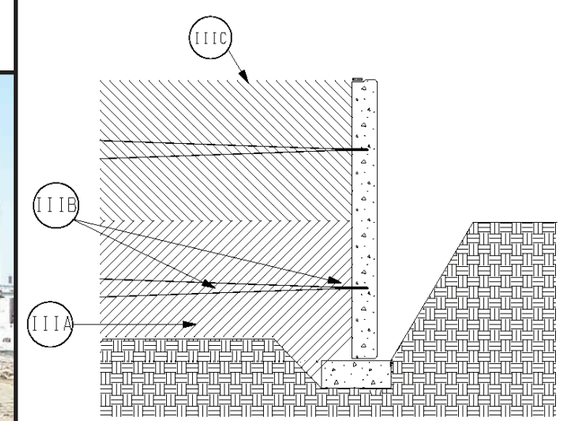

IIIA. PLACE AND COMPACT BACKFILL TO LEVEL OF FIRST PANEL ANCHOR IN MAX. 8″ LIFTS.
IIIB. PLACE SOIL REINFORCING STRIP, REMOVE SLACK AND ANCHOR STRIP AT BACK OF REINFORCING ZONE.
IIIC. PLACE COMPACT BACKFILL TO NEXT ANCHOR ROW. START FROM END OF MAT AND WORK TOWARD PANEL.